CH-527TXVBD

4K UHD+ HDMI over HDBaseT Transmitter with Bi-directional 24V PoC

Operation Manual

DISCLAIMERS

The information in this manual has been carefully checked and is believed to be accurate. Cypress Technology assumes no responsibility for any infringements of patents or other rights of third parties which may result from its use.

Cypress Technology assumes no responsibility for any inaccuracies that may be contained in this document. Cypress also makes no commitment to update or to keep current the information contained in this document.

Cypress Technology reserves the right to make improvements to this document and/or product at any time and without notice.

COPYRIGHT NOTICE

No part of this document may be reproduced, transmitted, transcribed, stored in a retrieval system, or any of its part translated into any language or computer file, in any form or by any means—electronic, mechanical, magnetic, optical, chemical, manual, or otherwise—without express written permission and consent from Cypress Technology.

© Copyright 2018 by Cypress Technology.

All Rights Reserved.

TRADEMARK ACKNOWLEDGMENTS

All products or service names mentioned in this document are trademarks of the companies with which they are associated.

SAFETY PRECAUTIONS

Please read all instructions before attempting to unpack, install or operate this equipment and before connecting the power supply. Please keep the following in mind as you unpack and install this equipment:

- Always follow basic safety precautions to reduce the risk of fire, electrical shock and injury to persons.
- To prevent fire or shock hazard, do not expose the unit to rain, moisture or install this product near water.
- Never spill liquid of any kind on or into this product.
- Never push an object of any kind into this product through any openings or empty slots in the unit, as you may damage parts inside the unit.
- Do not attach the power supply cabling to building surfaces.
- Use only the supplied power supply unit (PSU). Do not use the PSU if it is damaged.
- Do not allow anything to rest on the power cabling or allow any weight to be placed upon it or any person walk on it.
- To protect the unit from overheating, do not block any vents or openings in the unit housing that provide ventilation and allow for sufficient space for air to circulate around the unit.
- Please completely disconnect the power when the unit is not in use to avoid wasting electricity.

VERSION HISTORY

REV.	DATE	SUMMARY OF CHANGE
VS1	2018/12/22	Final technical review

CONTENTS

1. Introduction.....1
2. Applications.....1
3. Package Contents 1
4. System Requirements.....2
5. Features.....2
6. Operation Controls and Functions.....3
6.1 Front Panel 3
6.2 Rear Panel..... 4
6.3 IR Cable Pinouts 5
6.4 RS-232 Bypass Pinout..... 5
7. Connection Diagram 6
8. Specifications 7
8.1 Basic Specifications 7
8.2 Video Specifications..... 8
8.3 Audio Specifications..... 9
8.4 Cable Specifications 10
8.5 HDBaseT Features..... 11
9. Acronyms.....12

1. INTRODUCTION

This HDMI over HDBaseT Transmitter is a great solution for extending UHD video and audio as well as Ethernet and control via a single run of Cat.5e/6/7 cable over distances up to 100 meters. This extender complies with the advanced HDCP 2.2 and HDMI 2.0 standards, as well as supporting the legacy HDCP 1.x and HDMI 1.x standards. In addition, despite HDBaseT's 10.2Gbps bandwidth limitation, 4K UHD HDMI video sources, up to and including 4K@60Hz (4:4:4, 8-bit) as well as 10/12-bit sources with HDR, are able to be processed and extended by the use of AVLC (Adaptive Visually Lossless Compression) when needed. Multiple data and control interfaces are also able to be extended, including IR, RS-232, and LAN connections.

This unit supports bi-directional 24V PoC (Power over Cable) allowing the system to be completely powered by, or provide power to, a compatible connected Receiver, allowing for greater flexibility within different installation scenarios.

2. APPLICATIONS

- Household entertainment sharing and control
- Lecture room display and control
- Showroom display and control
- Meeting room presentation and control
- Classroom display and control

3. PACKAGE CONTENTS

- 1×HDMI to HDBaseT Transmitter with Bi-directional 24V PoC
- 1×24V/1.25A DC Power Adapter
- 1×2-pin Terminal Block
- 1×3.5mm to IR Blaster Cable
- 1×Operation Manual

4. SYSTEM REQUIREMENTS

- HDMI source equipment such as a media player, video game console or set-top box.
- An HDBaseT Receiver equipped with AVLC and 24V PoC support is strongly recommended.
- The use of "Premium High Speed" HDMI cables, and industry standard Cat.6, Cat.6a or Cat.7, is highly recommended.

5. FEATURES

- HDMI with HDR, 3D & 4K@60Hz support, DVI 1.0 compatible
- HDCP 1.x and HDCP 2.2 compliant
- Supports up to 4K UHD (18Gbps, 4K@50/60Hz 4:4:4, 8-bit) video input and output
- Supports Deep Color input and output up to 12-bit
- Supports 10-bit and 12-bit HDR (High Dynamic Range) input/output
- Supports CEC bypass
- HDBaseT feature support: HD Video and Audio, 100BaseT Ethernet, 24V PoC and Control (bi-directional IR/RS-232 pass-through)
- HDBaseT output transmits video, audio and data over a single Cat.5e/6/7 cable and can reach distances up to 100m/328ft at 4K when using Cat.6a/7
- Integrated AVLC (Adaptive Visually Lossless Compression) activates when the bandwidth requirements of the source are beyond 10.2Gbps (340MHz) allowing for support of sources up to 18Gbps (600MHz) with no loss of visual quality
- Supports pass-through of many audio formats including LPCM 2.0/5.1/7.1, Bitstream, and HD Bitstream
- Bi-directional 24V PoC allows the unit to be powered by, or provide power to, a compatible connected Receiver

Note: The 24V PoC function is designed to power, or receive power from, compatible Receiver units only. Non-PoC Receivers will need their own power supply. Other brands of Receiver may not be compatible.

6. OPERATION CONTROLS AND FUNCTIONS

6.1 Front Panel

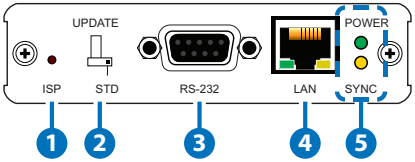

1. **ISP Pinhole:** This button is reserved for factory use only.
2. **STD/UPDATE Switch:** This switch is reserved for factory use only.

   Note: This should be left on the default setting of "STD" for normal operation.
3. **RS-232 Port:** Connect to a PC, laptop, or serial controllable device for the extension of RS-232 signals between both ends of the HDBaseT connection.
4. **LAN Port:** Connect to an Ethernet supporting device or to your local network, as appropriate, to extend the network to both ends of the HDBaseT connection.
5. **POWER LED:** This LED will illuminate to indicate the unit is on and receiving power.

   SYNC LED: This LED will illuminate when a live input source is detected.

6.2 Rear Panel

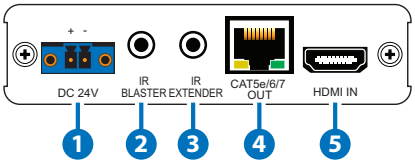

1. **DC 24V Terminal Block:** Plug the 24V DC power adapter into this terminal block and connect it to an AC wall outlet for power. (Optional)

   Note: This connection is not required if the unit is receiving power via 24V PoC from the Receiver.

2. **IR BLASTER Port:** Connect to the provided IR Blaster to transmit IR signals from the other end of the HDBaseT connection to devices within direct line-of-sight of the IR Blaster.

3. **IR EXTENDER Port:** Connect to an IR Extender to receive IR control signals and extend them to devices connected to the other end of the HDBaseT connection. Ensure that the remote being used is within direct line-of-sight of the IR Extender.

4. **CAT5e/6/7 OUT Port:** Connect to a compatible HDBaseT Receiver with a single Cat.5e/6/7 cable for transmission of all data signals. 24V PoC can also be supplied to, or received from, a connected compatible Receiver.

   Note: The 24V PoC function is designed to power, or receive power from, compatible Receiver units only. Non-PoC Receivers will need their own power supply. Other brands of Receiver may not be compatible.

5. **HDMI IN Port:** Connect to HDMI source equipment such as a media player, game console, or set-top box. DVI sources are supported with the use of an HDMI to DVI adapter.

6.3 IR Cable Pinouts

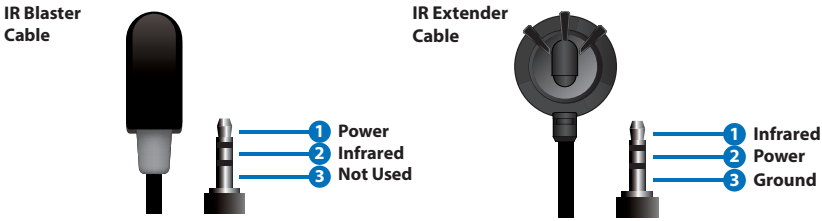

6.4 RS-232 Bypass Pinout

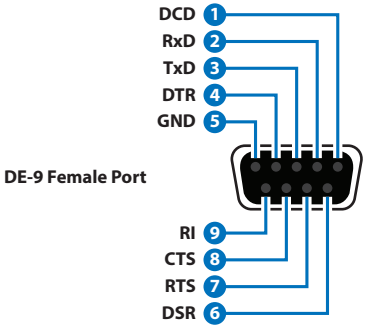

7. CONNECTION DIAGRAM

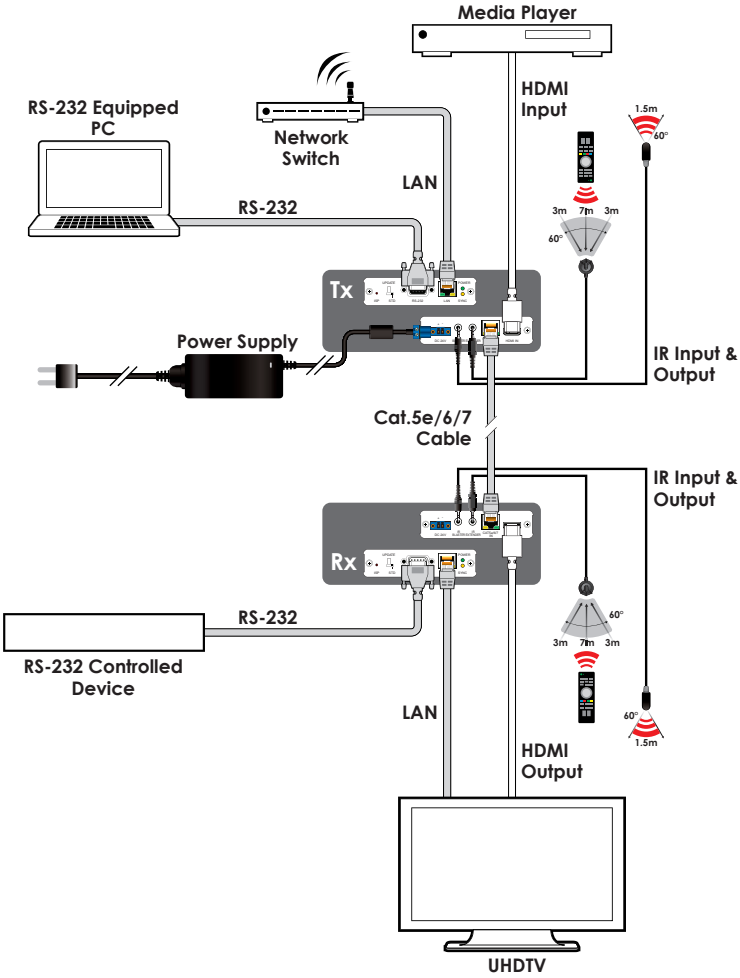

8. SPECIFICATIONS

8.1 Basic Specifications

HDMI Bandwidth	600MHz/18Gbps
HDBaseT Bandwidth	340MHz/10.2Gbps
Input Port	1×HDMI
Output Port	1×HDBaseT (RJ-45)
Pass-through Ports	1×IR Extender (3.5mm) 1×IR Blaster (3.5mm) 1×RS-232 (DE-9) 1×LAN (RJ-45)
IR Frequency	30 – 50kHz (30 – 60kHz under ideal conditions)
Baud Rate	Up to 115200
Power Supply	24V/1.25A DC (US/EU standards, CE/FCC/UL certified)
ESD Protection	Human Body Model ±8kV (Air Discharge), ±4kV (Contact Discharge)
Dimensions	102mm×25mm×107.5mm (W×H×D) [Case Only] 102mm×25mm×115mm (W×H×D) [All Inclusive]
Weight	252g
Chassis Material	Metal (Steel)
Chassis Color	Black
Operating Temperature	0˚C – 40˚C/32˚F – 104˚F
Storage Temperature	-20˚C – 60˚C/-4˚F – 140˚F
Relative Humidity	20 – 90% RH (Non-condensing)
Power Consumption	16.3W (Tx+Rx)

8.2 Video Specifications

Supported Resolutions (Hz)	Input	Output
	HDMI	HDBT
720×400p@70/85	✓	✓
640×480p@60/72/75/85	✓	✓
720×480i@60	✓	✓
720×480p@60	✓	✓
720×576i@50	✓	✓
720×576p@50	✓	✓
800×600p@56/60/72/75/85	✓	✓
848×480p@60	✓	✓
1024×768p@60/70/75/85	✓	✓
1152×864p@75	✓	✓
1280×720p@50/60	✓	✓
1280×768p@60RB/60/75/85	✓	✓
1280×800p@60RB/60/75/85	✓	✓
1280×960p@60/85	✓	✓
1280×1024p@60/75/85	✓	✓
1360×768p@60	✓	✓
1366×768p@60RB/60	✓	✓
1400×1050p@60RB/60	✓	✓
1440×900p@60RB/60/75	✓	✓
1600×900p@60RB	✓	✓
1600×1200p@60	✓	✓
1680×1050p@60RB/60	✓	✓
1920×1080i@50/60	✓	✓
1920×1080p@24/25/30	✓	✓
1920×1080p@50/60	✓	✓

Supported Resolutions (Hz)	Input	Output
	HDMI	HDBT
1920×1200p@60RB	✓	✓
2560×1440p@60RB	×	×
2560×1600p@60RB	×	×
2048×1080p@24/25/30	✓	✓
2048×1080p@50/60	✓	✓
3840×2160p@24/25/30	✓	✓
3840×2160p@50/60 (4:2:0)	✓	✓
3840×2160p@24/25/30, HDR10	✓	AVLC
3840×2160p@50/60 (4:2:0), HDR10	✓	AVLC
3840×2160p@50/60	✓	AVLC
4096×2160p@24/25/30	✓	✓
4096×2160p@50/60 (4:2:0)	✓	✓
4096×2160p@24/25/30, HDR10	×	×
4096×2160p@50/60 (4:2:0), HDR10	×	×
4096×2160p@50/60	×	×

8.3 Audio Specifications

HDMI Input/Output	
LPCM	
Max Channels	8 Channels
Sampling Rate (kHz)	32, 44.1, 48, 88.2, 96, 176.4, 192
Bitstream	
Supported Formats	Standard & High-Definition

8.4 Cable Specifications

Cable Length	1080p		4K30	4K60
	8-bit	12-bit	(4:4:4) 8-bit	(4:4:4) 8-bit
High Speed HDMI Cable				
HDMI Input	10m	5m	5m	3m
Ethernet Cable				
Cat.5e/6	100m		70m	
Cat.6a/7	100m		100m	

- **1080p (FHD Video)**
  - Up to 1080p@60Hz, 12-bit color
  - Data rates lower than 5.3Gbps or below 225MHz TMDS clock
- **4K30 (UHD Video)**
  - 4K@24/25/30Hz & 4K@50/60Hz (4:2:0), 8-bit color
  - 4K@50/60Hz (4:4:4, 8-bit) with AVLC active
  - Data rates higher than 5.3Gbps or above 225MHz TMDS clock but below 10.2Gbps
- **4K60 (UHD+ Video)**
  - 4K@50/60Hz (4:4:4, 8-bit), AVLC required over HDBaseT
  - 4K@50/60Hz (4:2:0, 10-bit HDR), AVLC required over HDBaseT
  - Data rates higher than 10.2Gbps

8.5 HDBaseT Features

HDBaseT Feature Set	
Video & Audio	Supported
IR Pass-through	Supported
RS-232 Pass-through	Supported
Accept power from Receiver	Supported
Send power to Receiver	Supported
LAN Pass-through	Supported

9. ACRONYMS

ACRONYM	COMPLETE TERM
AV	Audio/Video
AVLC	Adaptive Visually Lossless Compression
Cat.5e	Enhanced Category 5 cable
Cat.6	Category 6 cable
Cat.6a	Augmented Category 6 cable
Cat.7	Category 7 cable
CEC	Consumer Electronics Control
DVI	Digital Visual Interface
EDID	Extended Display Identification Data
HD	High-Definition
HDCP	High-bandwidth Digital Content Protection
HDMI	High-Definition Multimedia Interface
HDR	High Dynamic Range
HDTV	High-Definition Television
IP	Internet Protocol
IR	Infrared
LAN	Local Area Network
LED	Light-Emitting Diode
LPCM	Linear Pulse-Code Modulation
PC	Personal Computer
PD	Powered Device
PoC	Power over Cable
PSE	Power Sourcing Equipment
UHD	Ultra-High-Definition
UHD+	Ultra-High-Definition Plus
UHDTV	Ultra-High-Definition Television

CYPRESS TECHNOLOGY CO., LTD.
www.cypress.com.tw